JK Fenner

*Powered by Innovation, Driven by excellence*

# Installation and Maintenance Manual of JK Fenner Pin Bush Coupling



# Installation and Maintenance Instruction

- Before starting the assembly the shaft ends as well as the coupling parts have to be cleaned thoroughly.
- Trained personnel should carry out installation.
- Sufficient room is to be provided for the installation and later inspection and maintenance work.
- Mount the coupling parts using suitable equipment to prevent the shaft bearing from being damaged by axial forces during assembly.
- Check the key fit.
- Align the shaft allowing the gap between the flanges as per catalogue or available drawing.
- Refer the catalogue or GA drawing for detail of pin assembly.
- Tighten the fastener uniformly.
- While aligning, keep the radial and angular misalignment of the shaft ends as small as possible. This will improve the service life of coupling.
- Before start-up, check the alignment, axial backlash limitation and clearance gap and if necessary correct them.
- During operation coupling should be checked for running noise and sudden shaking, as the coupling should run with low noise and without shaking in operating phase.
- Setting of machine foundation or bearing wear will cause extra loading to be imposed on the coupling. Hence all this conditiones should be checked periodically.
- Any worn-out part like bush, pins etc. of the coupling during running should be replaced immediately to avoid any sever damage.
- Maintain the stock of necessary spares, like pins, bushes and washers etc

**Corporate Office :**
Khivraj Complex II, V Floor,
480, Anna Salai, Nandanam,
Chennai-600 035. Tel : +91 44 4399 4666
Email : contact@jkfenner.com
www.jkfenner.com

**Factory :**
Engineering Products Division
Plot No. 11 & 12, Phase IV, APIIC IDA,
Pashamialaram, Patancheru Mandal,
Medak (D), Pin-502 307
Tel: 08455 224505

JK Fenner
*Powered by Innovation, Driven by excellence*

JK Fenner

*Powered by Innovation, Driven by excellence*

# Installation and Maintenance Manual of JK Fenner Resilient Coupling



# Installation and Maintenance Instruction

Prior to the installation, disassemble the coupling and check whether all the coupling parts are available and clean all the parts. Trained personnel should carry out installation. The following points should be followed carefully.

- Check hub bores, keyways and shafts for any raised metal, nicks, burrs, dents, etc., dress if necessary.
- Mount the coupling parts using suitable equipment to prevent the shaft bearing from being damaged by axial forces during assembly.
- In case of any approved drawing, the assembly should be done as per the same.
- Mount the hub on shaft in the specified direction so that they are flush with the shaft ends.
- While mounting hub on shaft, a clearance should exist over the top of keys.
- Check key fit, it should be side fitted.
- Carefully align the shafts ends allowing gap 'G' as per Catalogue or other approved drawing.
- While aligning, keep the radial and angular misalignment of the shaft ends as small as possible. This will improve the service life of coupling.
- Thoroughly fill the grooves on hub with lubricant before insertion of grid spring. Insert the grid spring element onto hubs, carefully engaging slots of both hubs.
- Place the covers over the grid spring area and bolt holes. Tighten fasteners uniformly.
- After connecting the flange halves fill the coupling through grease nipples. When filling through the grease fitting make sure that the coupling is being filled. If there is difficulty in filling, remove grease fitting or plug. Once you are sure that the coupling is filled, replace any of the grease fitting or plugs you have removed and properly tighten them.
- After an initial run at full speed for about an hour, the assembly should be topped up with further quantity of grease for regular run. But it is strongly recommended to open cover and ensure proper lubrication of springs at regular interval.
- Sufficient room is to be provided for the installation and later inspection and maintenance work.
- Before start-up, check the alignment, axial backlash limitation and clearance gap and if necessary correct them.

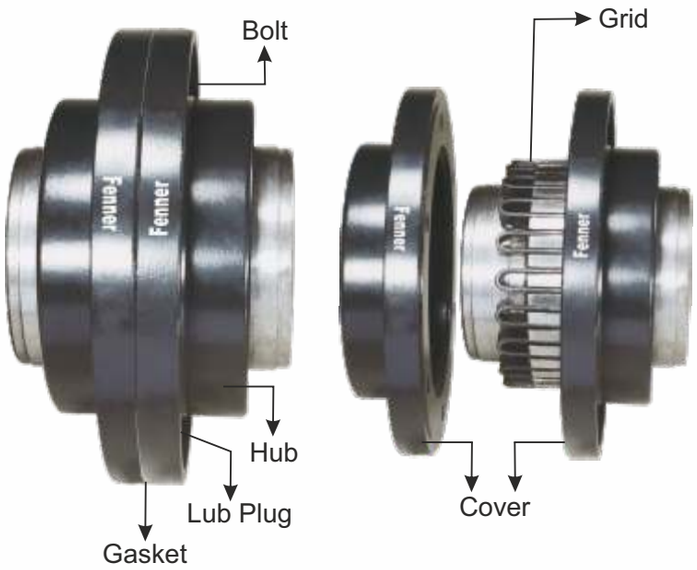


*JK Fenner Resilient Coupling*

- Couplings are designed to accommodate residual misalignment, which is combined effect of angular, parallel & axial misalignment. The angular misalignment should not be more than ½ degree, the parallel misalignment should not be more than 0.5mm. Whereas the axial misalignment should be incidental.
- During operation coupling should be checked for running noise and sudden shaking, as the coupling should run with low noise and without shaking in operating phase.

**LUBRICATION SCHEDULE**

- Use lubricant as recommended. For normal working condition it is recommended to use Indian Oil "Servogem2", or any equivalent Grease.
- After the first 3 months of operation coupling should be relubricated. From then on the lubrication interval can be extended to 6 months but not to exceed a maximum of 1 year. The lubrication interval should take into account the severity of operation.
- Excessive misalignment, high ambient temperatures, and frequent rapid reversing may necessitate more frequent inspections and replenishment.
- Clean coupling of all old lubricant and replenish every one year.

**Corporate Office :**
Khivraj Complex II, V Floor,
480, Anna Salai, Nandanam,
Chennai-600 035. Tel : +91 44 4399 4666
Email : contact@jkfenner.com
www.jkfenner.com

**Factory :**
Engineering Products Division
Plot No. 11 & 12, Phase IV, APIIC IDA,
Pashamialaram, Patancheru Mandal,
Medak (D), Pin-502 307
Tel: 08455 224505

JK Fenner
*Powered by Innovation, Driven by excellence*

JK Fenner
*Powered by Innovation, Driven by excellence*

**MISALIGNMENT:**

The crowning of the teeth allows the coupling to withstand parallel misalignment upto a maximum of 10.25 mm and angular misalignment upto a maximum of 1.5° per gear mesh. The coupling can also absorb axial displacement of the shafts upto a maximum of 3 mm.

**SELECTION OF THE COUPLINGS:**

The following details are required for selection of the coupling:

1. Type of driven machine.
2. Power absorbed by the driven machine and Peak load.
3. Speed and Diameter of the connecting shafts and space available for accommodating the coupling.
4. Maximum misalignment to be compensated.
5. Surrounding temperature.
6. Any other special feature of the drive.

**Example** : A gear couplings is required to transmit 250 KW from an Electric Motor running at 730 rev/min to a Pulper Machine. Considering the peak load as 180% of full load, the Motor shaft as 100 mm and the Pulper shaft as 110 mm, select a suitable gear coupling.

a) Service factor: 2 (for heavy duty application)

b) Peak load: 180% of full load.

c) Design power: 250 x 180/100 x 2 = 900 KW

d) Powerto be transmitted at 100 rev/min : 900 x 100/730=123.3 KW

e) Coupling size : By referring to the Table, coupling size FGC 5, has got a rating of 150 KW at 100 rev/min which exceeds the required power of 123.3KW. The bore range is 60 mm to 110 mm. Hence, size FGC 5 is selected for the application.

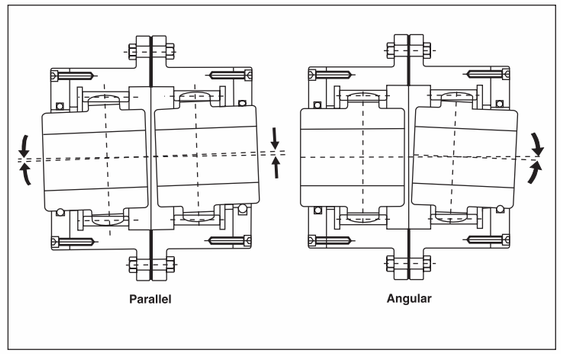


**MISALIGNMENTS**



Custom built Gear Spacer Couplings and Torsion Shaft Gear Couplings are also manufactured & supplied as per requirements. Please contact JK Fenner with all details.

**Corporate Office :**
Khivraj Complex II, V Floor,
480, Anna Salai, Nandanam,
Chennai-600 035. Tel : +91 44 4399 4666
Email : contact@jkfenner.com
www.jkfenner.com

**Factory :**
Engineering Products Division
Plot No. 11 & 12, Phase IV, APIIC IDA,
Pashamialaram, Patancheru Mandal,
Medak (D), Pin-502 307
Tel: 08455 224505

JK Fenner
*Powered by Innovation, Driven by excellence*

JK Fenner
*Powered by Innovation, Driven by excellence*

# Gear Couplings



# Gear Couplings

JK Fenner
*Powered by Innovation, Driven by excellence*

JK Fenner Curved Tooth Flexible Gear Couplings are the result of many years of experience in the field of Mechanical Power Transmission.

These Gear Couplings are distinguished by their mechanical flexibility and compensation of Angular, Parallel and Axial misalignments of the connected shafts. They are made for extensive use in Metal Rolling Mills, Paper Machinery, Cranes, Dredgers, Rubber and Plastic Industries, Cement Plants, Conveyors and Elevators, Compressors, Fans and Blowers, Screens and other general industries.

Flexible Gear Couplings basically consist of two hubs, with crowned external teeth and two outer sleeves with internal spur teeth.

Gear Hubs and the outer sleeves are manufactured from carbon steel and are hardened to the required degree. They are machined to fine tolerances for proper meshing of the gears as well as for inter-changeability.

**HUBS:**

The teeth of Gear Hubs are crowned and are generated by involute system. The amount of crowning and backlash values are so chosen as to ensure the best results in torque transmission, greater flexibility and smooth operations.

**SLEEVES:**

The internal teeth of the sleeves are generated to ensure correct profile. The coupling sleeves are joined together with high tensile steel bolts (class 8.8 IS:1367) fitted using a gasket in between them.

**'O' RINGS:**

The setting of special 'O' Rings at the ends of coupling hubs prevents leakage of lubricants and entry of dust. The 'O' rings can also withstand high degree of temperature up to 120°C.

**SEAL CARRIERS:**

Seal carriers have been provided for sizes from FGC 11 to FGC 19 to facilitate inspection and replacement of 'O' rings without disturbing the alignment.

**POWER RATINGS:**

The normal power ratings are given in the Table. For selection of the correct size of couplings, proper service factor depending on the type of machines and the peak load should be considered.

**SERVICE FACTOR:**

Generally, for medium duty use a service factor of 1.5. For heavy duty use a factor of 2 and for extra heavy duty a factor of 3 should be used. ***For special applications please contact Fenner with full details.***

# Gear Couplings

JK Fenner
*Powered by Innovation, Driven by excellence*

**LUBRICATION :**

The coupling must be filled with grease or oil. It is recommended to use grease where the maximum temperature is within 80°C and for temperature above 80°C, oil should be used. When using grease it is suggested to fill the coupling completely with Lithium based grease with EP additives (NLGI-No.1 consistency). When the coupling is to be filled with oil, fill half the coupling with EP Gear Oil.

**RECOMMENDATION FOR GREASE & OIL:**

**Grease :** Indian Oil - Servogem EP 1 or equivalent.

**Oil :** Indian Oil - Servomesh SP 680 or equivalant.

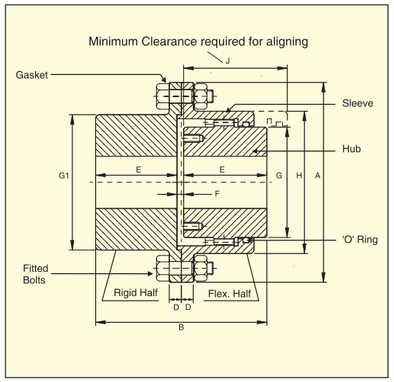


HALF FLEXIBLE COUPLINGS

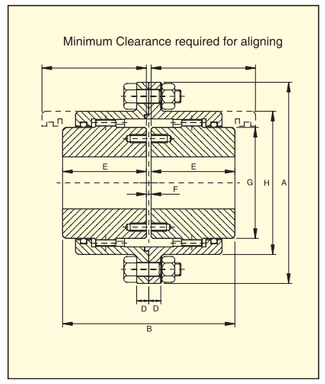


COUPLINGS SIZES 1 To 10

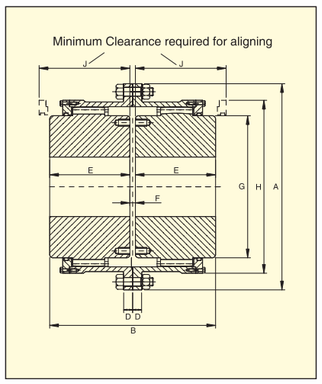


COUPLINGS SIZES 11 To 19

| Coupling No / Size | Power at 100 rpm in Kw | Maximum Torque in Nm | Hub Bore (mm) | | | Dimensions (mm) | | | | | | | | | Maximum Speed RPM | Approx. Weight in Kg. | | Approx. Gd² Value in Kg M² | | Clamping Bolt Size | No. Of Bolts | Max. Misalignment Capacity | | | Amount of Grease / Oil | |
|---|---|---|---|---|---|---|---|---|---|---|---|---|---|---|---|---|---|---|---|---|---|---|---|---|---|
| | | | Flex | | Rigid | | | | | | | | | | | | | | | | | | | | |
| | | | Min. | Max | Max | A | B | D | E | F | G | G 1 | H | J | | Full Flex | Half Flex | Full Flex | Half Flex | | | Parallel (mm) | Axial Float (mm) | Angular per Gear Mesh | Kg. | Ltr. |
| FGC 1 | 11.5 | 1100 | 14 | 55 | 60 | 170 | 115 | 17 | 55 | 5 | 78 | 90 | 110 | 65 | 6700 | 11 | 10.5 | 0.14 | 0.11 | M12 X 50 | 6 | 0.80 | 0.5 | 1.5° | 0.25 | 0.20 |
| FGC 2 | 28.5 | 2720 | 20 | 60 | 75 | 185 | 145 | 17 | 70 | 5 | 85 | 110 | 125 | 85 | 6100 | 16 | 15 | 0.21 | 0.18 | M12 X 50 | 6 | 0.95 | | | 0.50 | 0.40 |
| FGC 3 | 51.5 | 4920 | 30 | 75 | 90 | 220 | 175 | 20 | 85 | 5 | 107 | 130 | 150 | 105 | 5200 | 26 | 26 | 0.45 | 0.44 | M16 X 60 | 6 | 1.10 | | | 0.80 | 0.60 |
| FGC 4 | 96.5 | 9220 | 40 | 100 | 110 | 250 | 215 | 20 | 105 | 5 | 138 | 160 | 178 | 125 | 4500 | 41 | 42 | 0.98 | 0.88 | M16 X 60 | 8 | 1.30 | | | 1.00 | 0.80 |
| FGC 5 | 150 | 14320 | 46 | 120 | 130 | 290 | 240 | 25 | 115 | 10 | 166 | 185 | 204 | 140 | 3950 | 63 | 63 | 1.90 | 1.90 | M20 X 75 | 8 | 1.45 | | | 1.80 | 1.50 |
| FGC 6 | 230 | 21960 | 50 | 125 | 150 | 320 | 260 | 25 | 125 | 10 | 176 | 215 | 230 | 155 | 3500 | 86 | 87 | 3.05 | 3.06 | M20 X 75 | 8 | 1.55 | 1.0 | | 2.40 | 2.00 |
| FGC 7 | 390 | 37250 | 60 | 145 | 170 | 350 | 290 | 25 | 140 | 10 | 208 | 240 | 260 | 175 | 3250 | 120 | 120 | 5.25 | 5.20 | M20 X 75 | 10 | 1.80 | | | 3.50 | 3.00 |
| FGC 8 | 515 | 49180 | 70 | 165 | 200 | 380 | 330 | 25 | 160 | 10 | 230 | 285 | 290 | 200 | 3000 | 165 | 170 | 8.52 | 8.63 | M20 X 75 | 12 | 1.90 | | | 4.00 | 4.00 |
| FGC 9 | 644 | 61500 | 80 | 200 | 220 | 430 | 340 | 25 | 165 | 10 | 270 | 315 | 332 | 210 | 2600 | 210 | 220 | 15.00 | 15.00 | M24 X 80 | 10 | 2.25 | | | 5.50 | 5.00 |
| FGC 10 | 930 | 88800 | 100 | 230 | 260 | 490 | 370 | 25 | 180 | 10 | 315 | 370 | 390 | 230 | 2300 | 310 | 320 | 28.67 | 29.00 | M24 X 80 | 12 | 2.60 | | | 8.50 | 8.00 |
| FGC 11 | 1265 | 120800 | 110 | 260 | 280 | 545 | 410 | 30 | 200 | 10 | 350 | 380 | 445 | 270 | 2100 | 454 | 430 | 52.00 | 46.18 | M24 X 90 | 12 | 3.30 | 2.0 | | 12.50 | 12.00 |
| FGC 12 | 1600 | 152800 | 150 | 300 | 310 | 590 | 490 | 30 | 240 | 10 | 404 | 420 | 490 | 300 | 1900 | 630 | 590 | 88.60 | 76.57 | M24 X 90 | 14 | 3.50 | | | 14.00 | 16.00 |
| FGC 13 | 2880 | 275000 | 160 | 330 | 340 | 680 | 535 | 35 | 260 | 15 | 442 | 480 | 555 | 320 | 1550 | 887 | 850 | 155.00 | 140.00 | M30X110 | 14 | 6.65 | | | 16.00 | 20.00 |
| FGC 13A | 3980 | 380000 | 200 | 340 | 370 | 730 | 575 | 35 | 275 | 25 | 470 | 520 | 595 | 350 | 1400 | 1050 | 1050 | 215.00 | 203.00 | M30X110 | 16 | 7.35 | 3.0 | | 18.00 | 24.00 |
| FGC 14 | 3980 | 380000 | 200 | 370 | 370 | 730 | 575 | 35 | 280 | 15 | 500 | 520 | 610 | 340 | 1400 | 1097 | 1050 | 230.00 | 203.00 | M30X110 | 16 | 7.35 | | | 18.00 | 24.00 |
| FGC 14A | 4765 | 455000 | 230 | 360 | 400 | 780 | 635 | 35 | 305 | 25 | 510 | 560 | 640 | 375 | 1350 | 1310 | 1350 | 300.00 | 305.00 | M30X110 | 18 | 8.15 | | | 25.00 | 33.00 |
| FGC 15 | 4765 | 455000 | 230 | 410 | 400 | 780 | 655 | 40 | 320 | 15 | 540 | 560 | 660 | 385 | 1350 | 1440 | 1350 | 352.00 | 305.00 | M30X110 | 18 | 8.15 | | | 25.00 | 33.00 |
| FGC 16 | 6800 | 650000 | 260 | 450 | 460 | 900 | 720 | 40 | 350 | 25 | 630 | 650 | 750 | 425 | 1150 | 2120 | 2000 | 670.00 | 611.20 | M36X120 | 18 | 8.55 | | | 40.00 | 49.00 |
| FGC 16A | 8375 | 800000 | 300 | 490 | 530 | 1000 | 815 | 40 | 395 | 25 | 700 | 750 | 855 | 470 | 1050 | 3057 | 2900 | 1210.00 | 1132.00 | M36X120 | 20 | 9.15 | | | 55.00 | 64.00 |
| FGC 17 | 9000 | 850000 | 300 | 520 | 530 | 1000 | 820 | 40 | 400 | 20 | 720 | 750 | 855 | 490 | 1050 | 3100 | 2900 | 1275.00 | 1132.00 | M36X120 | 20 | 9.15 | | | 55.00 | 64.00 |
| FGC 17A | 10730 | 1025000 | 320 | 540 | 580 | 1100 | 920 | 40 | 440 | 40 | 750 | 820 | 955 | 525 | 950 | 4196 | 4050 | 2030.00 | 1913.00 | M36X120 | 20 | 9.65 | | | 60.00 | 72.00 |
| FGC 18 | 11800 | 1120000 | 320 | 620 | 580 | 1100 | 920 | 55 | 450 | 20 | 820 | 820 | 950 | 535 | 950 | 4370 | 4050 | 2198.00 | 1913.00 | M36X150 | 20 | 9.65 | | | 60.00 | 72.00 |
| FGC 18A | 12700 | 1200000 | 400 | 600 | 700 | 1250 | 1000 | 55 | 475 | 50 | 840 | 920 | 1050 | 560 | 825 | 5430 | 5200 | 3410.00 | 3179.00 | M48X160 | 20 | 10.25 | | | 70.00 | 80.00 |
| FGC 19 | 15500 | 1470000 | 400 | 710 | 700 | 1250 | 1000 | 55 | 485 | 30 | 915 | 920 | 1050 | 560 | 825 | 5590 | 5200 | 3588.00 | 3179.00 | M48X160 | 20 | 10.25 | | | 70.00 | 80.00 |

*All dimensions are subject to alteration without notice.*