

JK Fenner

Powered by innovation, Driven by excellence

SMSR TBD

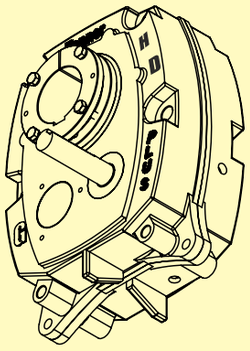

Fenner SMSR Twin Tapered Bushing have provided users with ease in installing and dismantling gearbox with machine. This exclusive feature revolutionized the shaft mount speed reducer concept and insured that Torque-Arm Speed Reducers would not seize to the customer's driven shaft.

Another from Fenner, the supplier of industry preferred quality speed reducers, provide positive easy-on, easy-off, mounting for all reducer sizes from B to J.

A tapered bore in both sides of the reducer's output hub snugs up against a matching taper on the outer surface of the bushing "Twin Tapered". Bushing mounting screws pass through the bushing flange into a mounting collar on the hub. As the screws are tightened, the bushing moves inward, gripping the driven machine's input shaft tightly and evenly around every point on its circumference.

Exploded View



SMSR - Twin Bush Design

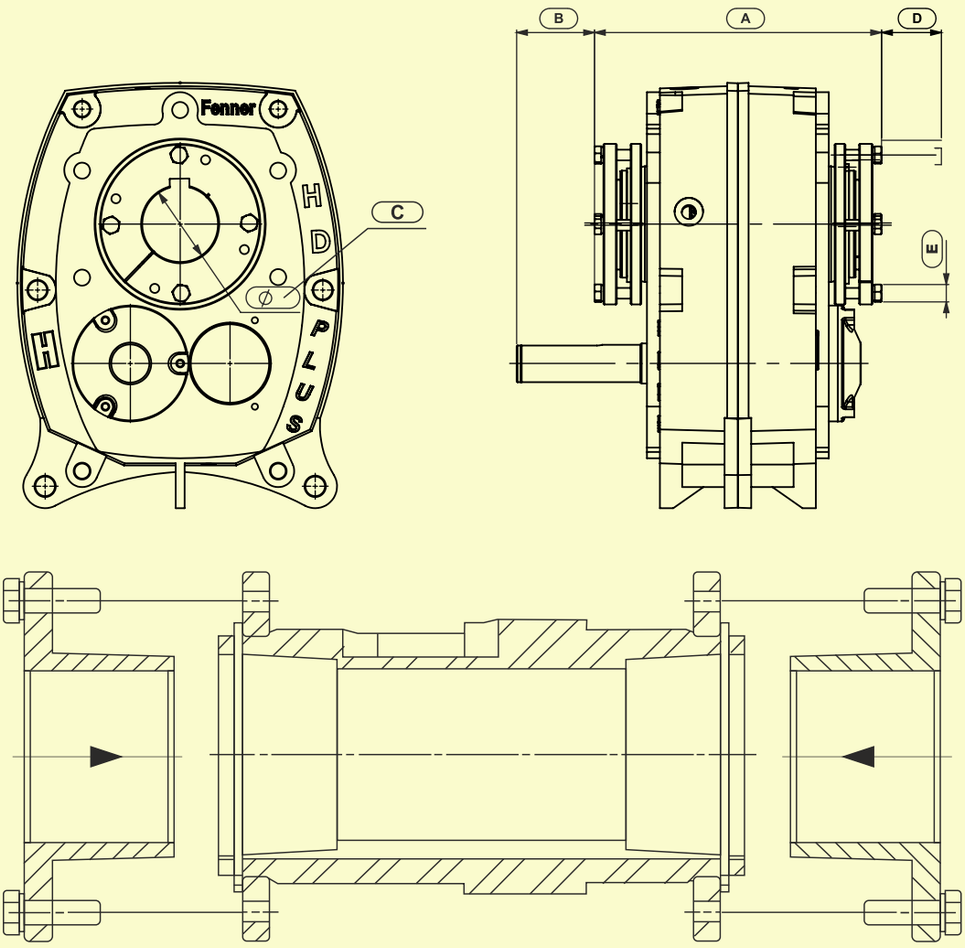

(Dimensions in mm)

S. No	Model No	Max. Bore ØC	A	B	D	E	F
1	E - HD Plus-TBD	55	224	66	52	M8	22-26
2	F - HD Plus-TBD	65	245	72	55	M8	22-26
3	G - HD plus-TBD	75	275	79	64	M10	24-29
4	H - HD Plus-TBD	85	316	90	67	M12	33-40
5	J - HD Plus -TBD	100	331	104	67	M12	42-48

A Total hub length
B Input shaft length Increased
C Max. bore capacity
D Bolt removal distance
E Bolt size
F Bolt tightening Torque (Nm)

Note: *Refer SMSR_HD plus series catalogue for power, torque, selection details.*

Corporate Office :
Khivraj Complex II, V Floor, 480, Anna Salai,
Nandanam, Chennai-600 035.
Tel : +91 44 4399 4666
Email : contact@fennermail.com,
www.jkfenner.com

Registered Office :
3, Madurai - Melakkal Road,
Kochadai, Madurai - 625 016.
Tel : 0452-2383801, 2383802

/jkfenner /jkfenner.official /jkfenner /jkfennerindia/